MB PL-CS-ML

front view / lens

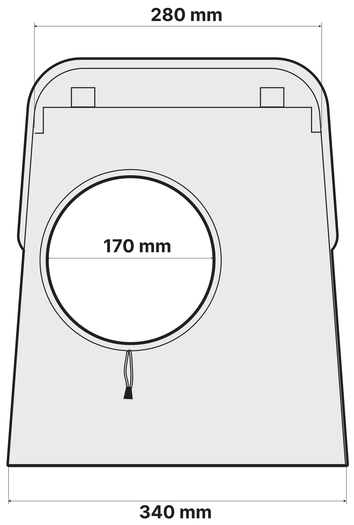

side view

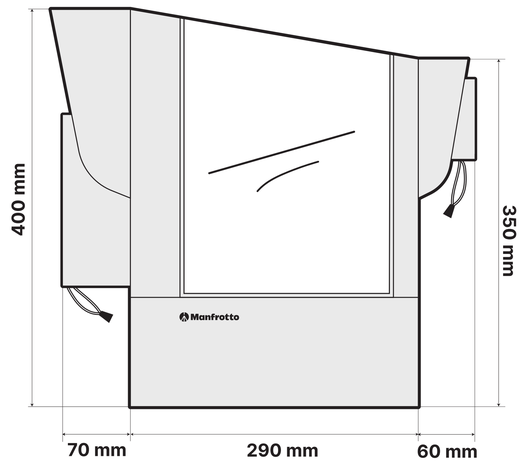

back view / viewfinder

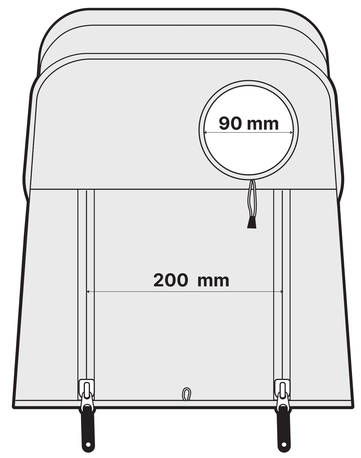

portable pouch/
side view

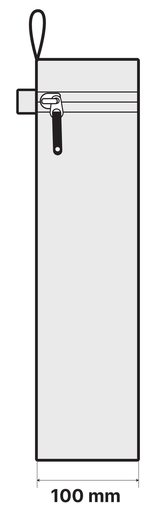

portable pouch/
front view

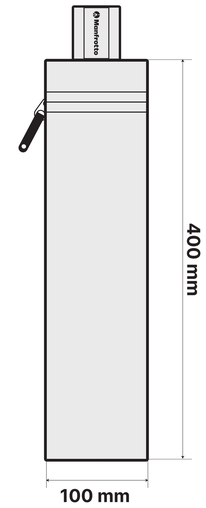

MB PL-CS-SM

front view / lens

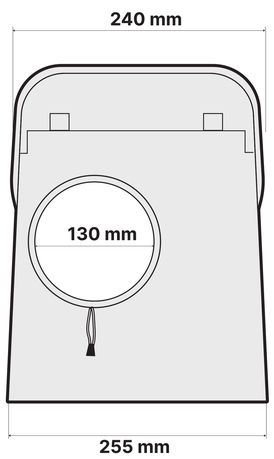

side view

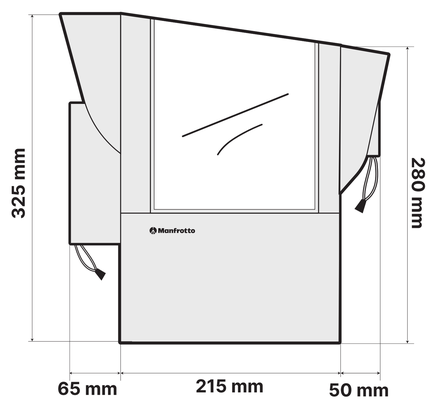

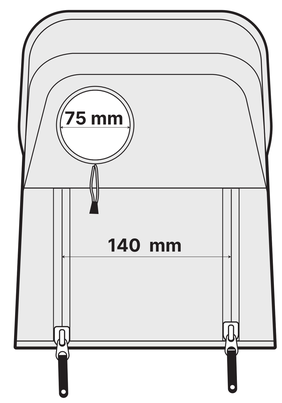

portable pouch/
side view

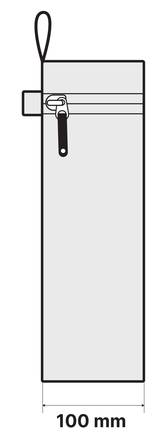

portable pouch/
front view

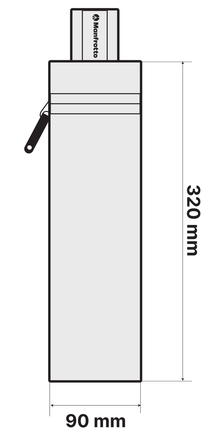

MB PL-TS

side view / expansion

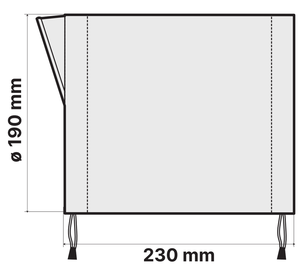

+

side view / max. dimension

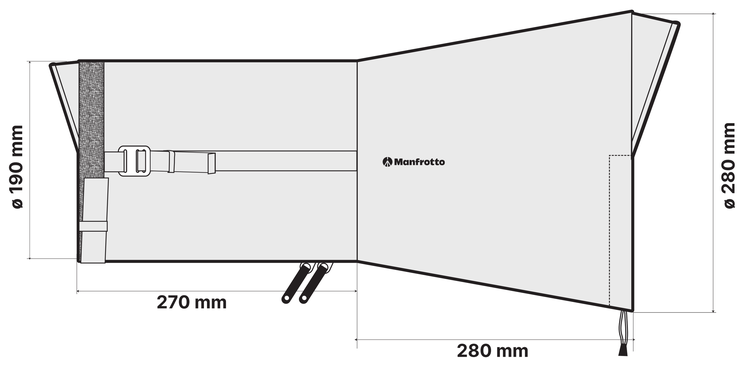

side view / min. dimension

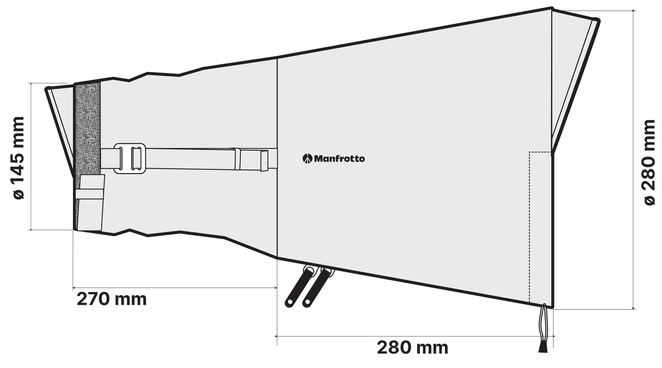

portable pouch/
side view

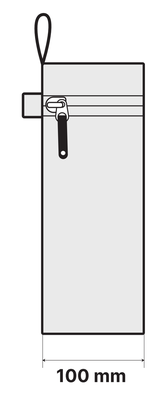
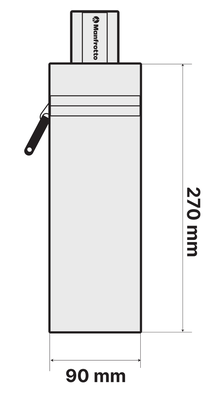
portable pouch/
front view